VK A UNI ST (308 025)

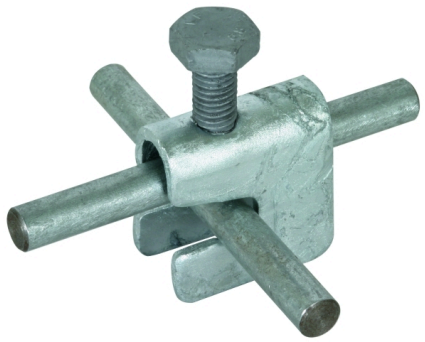

Figure without obligation

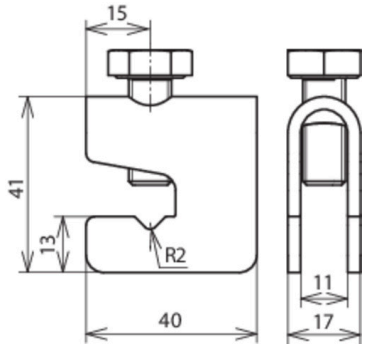

Type Part No.	VK A UNI ST 308 025
Material	St/tZn
Clamping range Rd / Rd	(+) 6-10 / 6-10 mm
Clamping range Rd / Fl	(+) 6-10 / 30 mm
Clamping range Fl / Fl	(II) 30 / 30 mm
Screw	M10 x 25 mm
Material of screw	StSt
Standard	EN 62561-1
Short-circuit current (a.c. 50 Hz / d.c.) (1 s; ≤ 300 °C)	9 kA
Weight	100 g
Customs tariff number (Comb. Nomenclature EU)	85359000
GTIN	4013364035881
PU	50 pc(s)

We reserve the right to introduce changes in performance, configuration and technology, dimensions, weights and materials in the course of technical progress. The figures are shown without obligation.